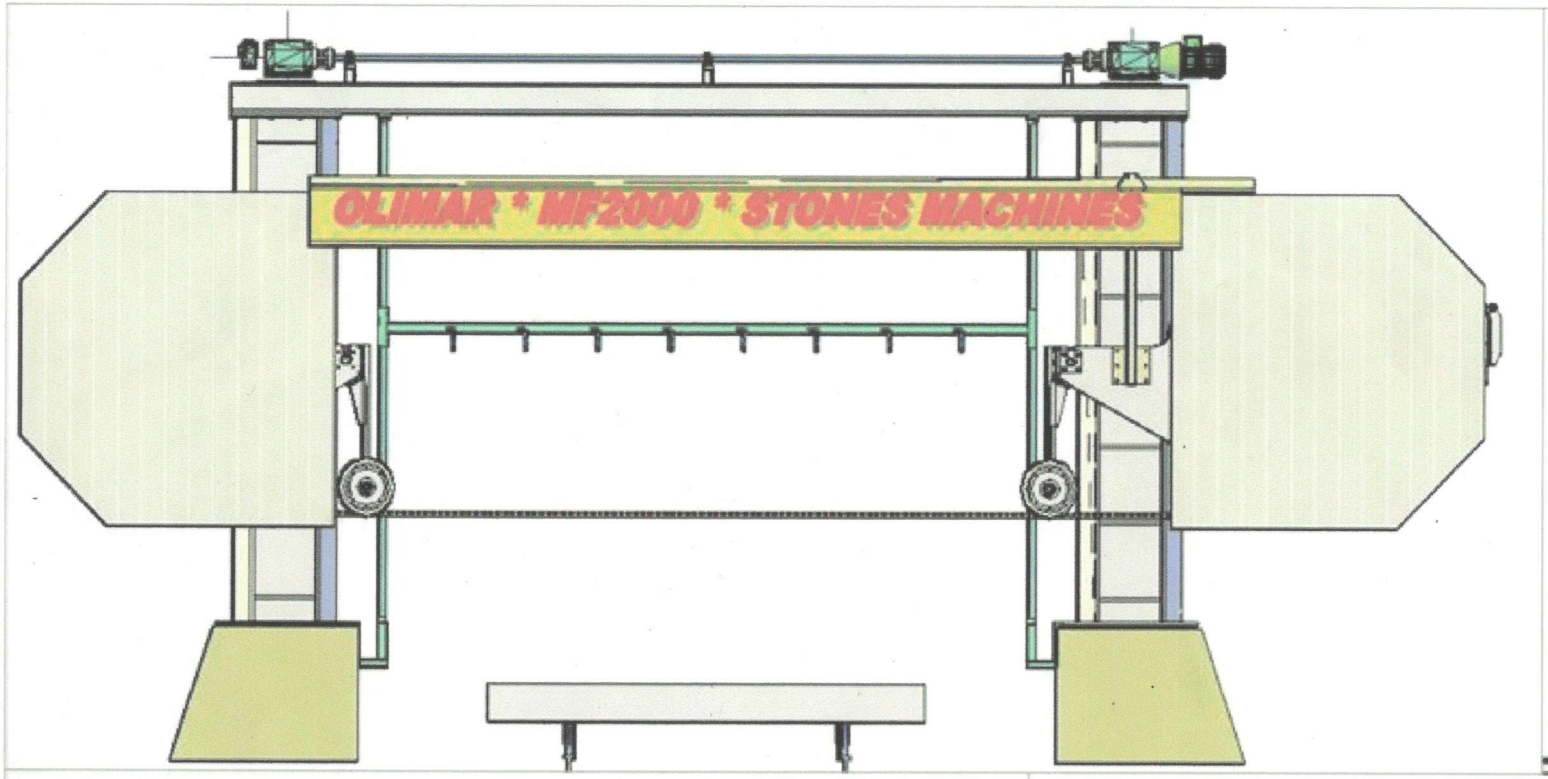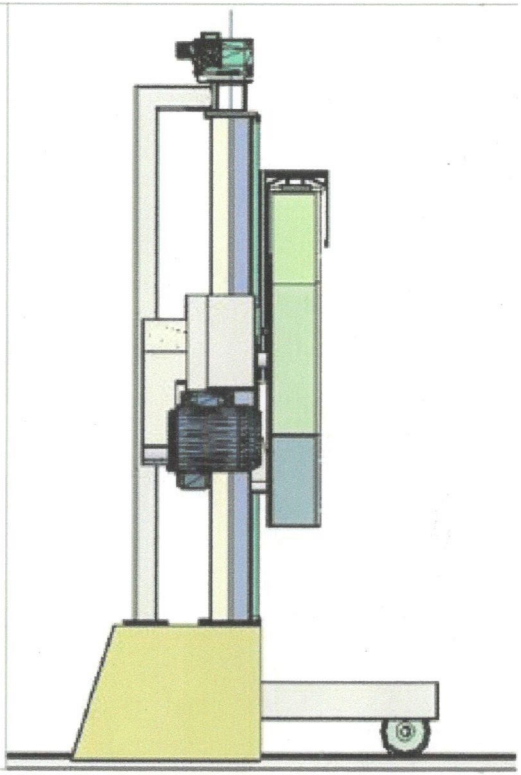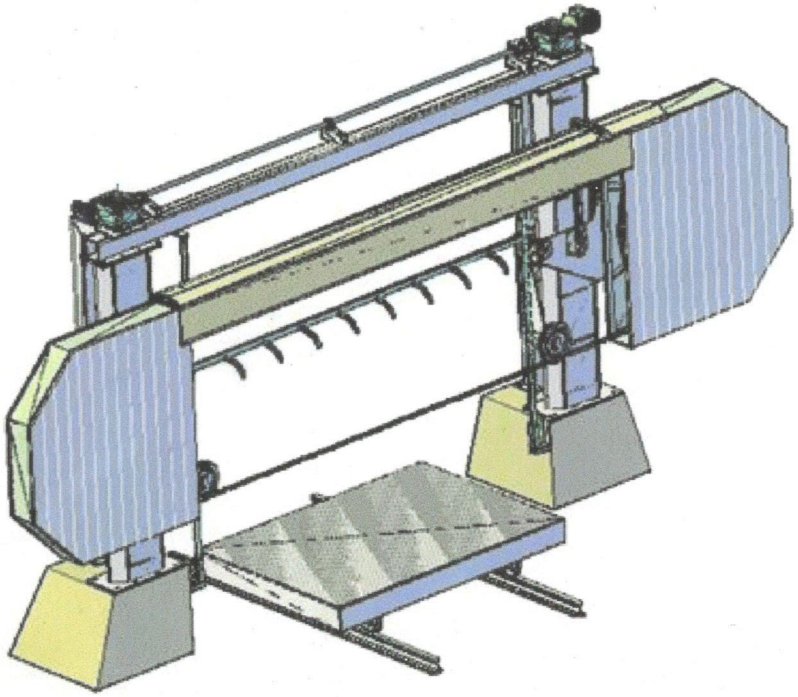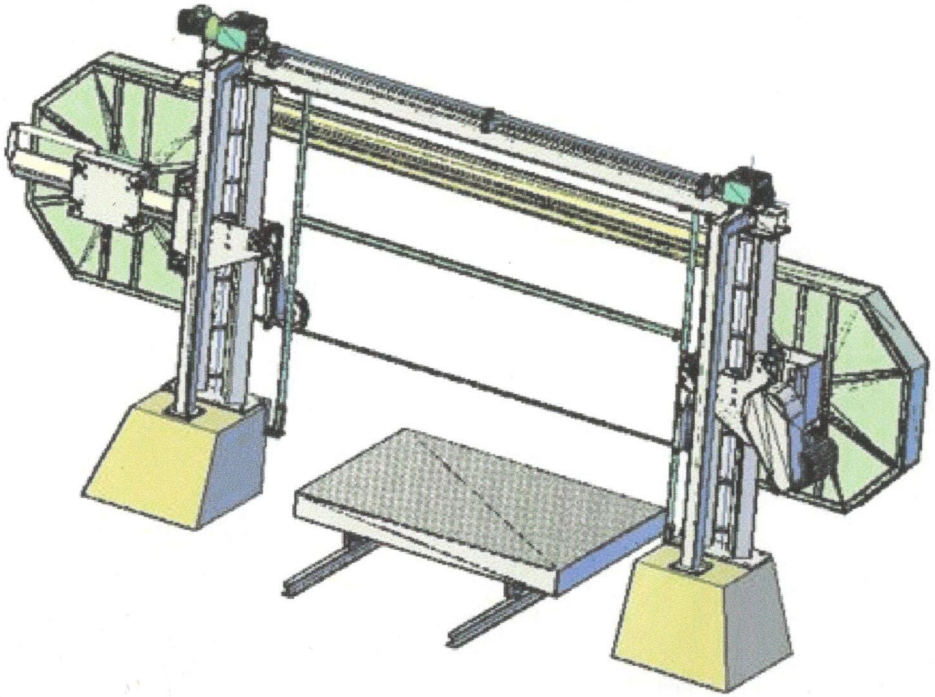
OLIMAR * MF2000 * STONES MACHINES